GardTec

Revision	Date	Approved	Name

Part Number:

SC162-W13

Material: C1008 Steel
Finish:Bright Nickel Chrome Plating
Ring Diameter: 1.6mm
Rib Diameter: 1.6mm
Disc T=0.8mm
General Tolerance Unless Noted:±0.5mm
Unit: mm
RoHS Compliant

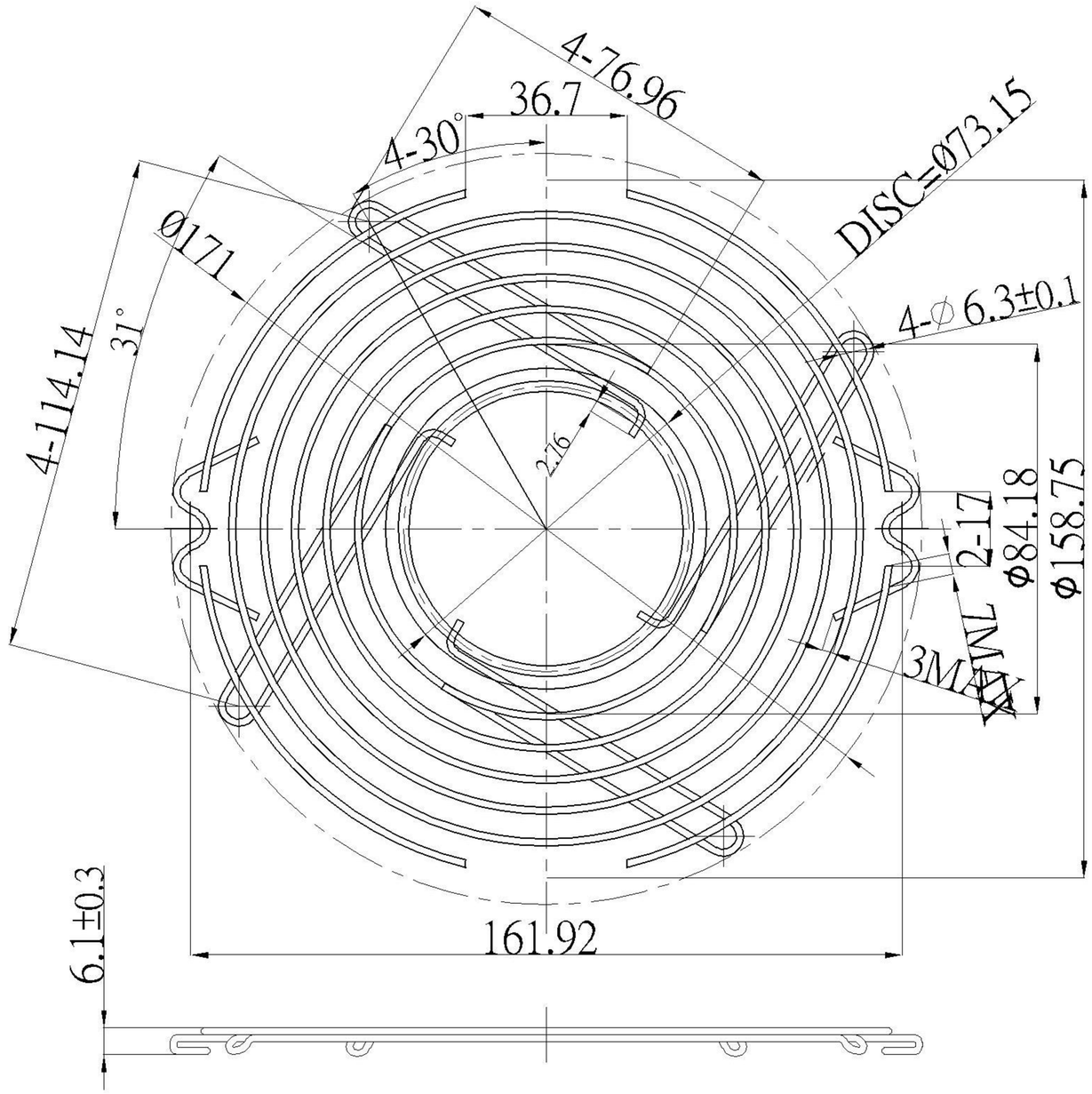

These drawings are the property of Gardtec,Inc and cannot be reproduced for or communicated to a third party without the express written permission of Gardtec,Inc.